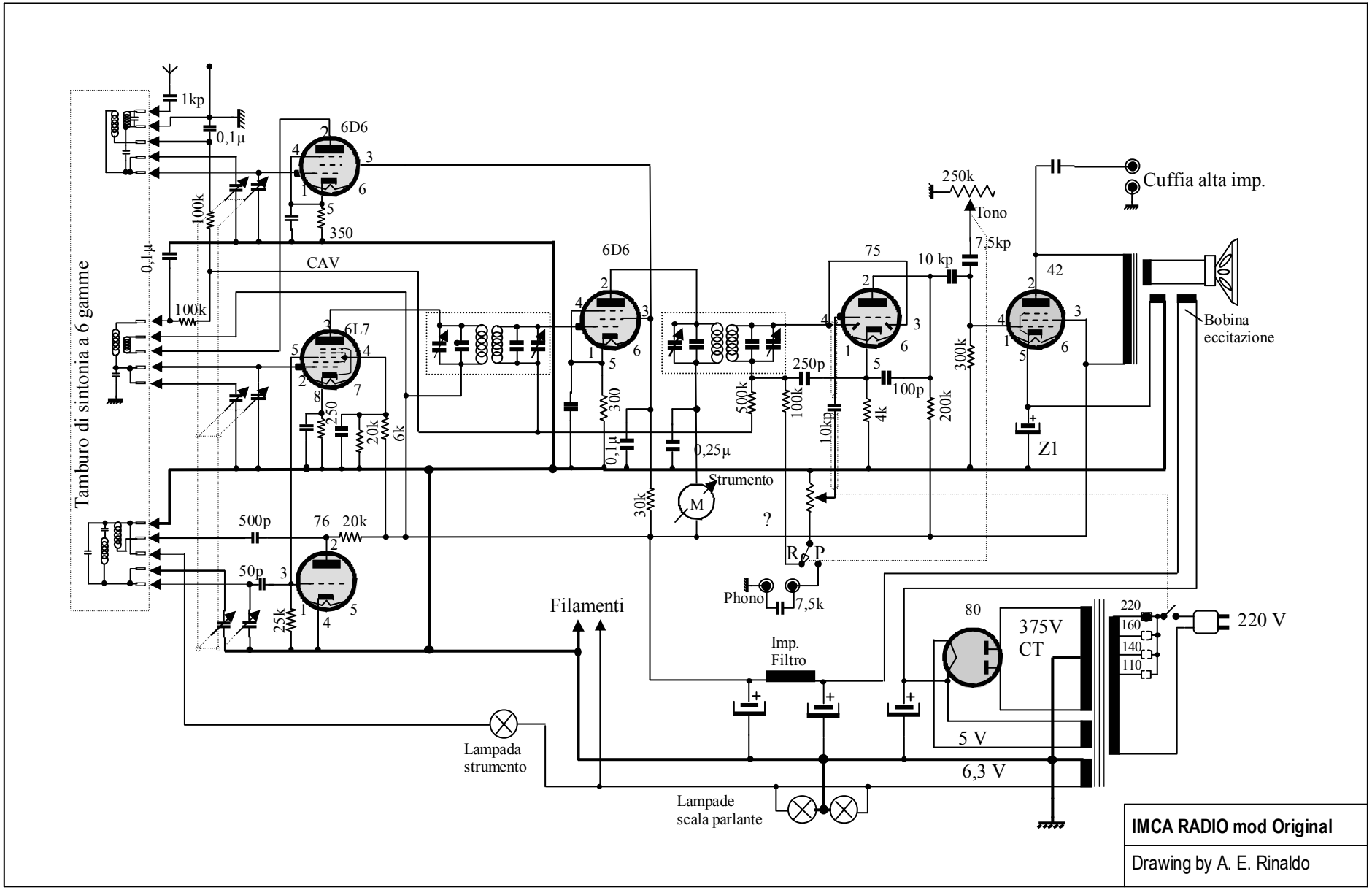

IMCA RADIO mod Original

Drawing by A. E. Rinaldo